සියලු ම හිමිකම් ඇවිරිණි /முழுப் பதிப்புரிமையுடையது/All Rights Reserved]

ශ්‍රී ලංකා විභාග දෙපාර්තමේන්තුව ශ්‍රී ලංකා විභාග දෙපාර්තමේන්තුව
இலங்கைப் பரீட்சைத் திணைக்களம்
Department of Examinations, Sri Lanka

අධ්‍යයන පොදු සහතික පත්‍ර (උසස් පෙළ) විභාගය, 2024
கல்விப் பொதுத் தராதரப் பத்திர (உயர் தர)ப் பரீட்சை, 2024
General Certificate of Education (Adv. Level) Examination, 2024

තාක්ෂණවේදය සඳහා විද්‍යාව I தொழினுட்பவியலுக்கான விஞ்ஞானம் I **Science for Technology I**	**67 E I**	පැය දෙකයි இரண்டு மணித்தியாலங்கள் ***Two hours***

Instructions:

* *Answer **all** the questions.*
* *Write your **Index Number** in the space provided in the answer sheet.*
* *Read the instructions given on the back of the answer sheet carefully.*
* *In each of the questions **1** to **50**, pick one of the alternatives from (1), (2), (3), (4), (5) which is **correct** or **most appropriate** and **mark your response on the answer sheet with a cross** (×) **in accordance with the instructions given on the back of the answer sheet.***
* ***Use of non-programmable calculators is allowed.***

1. What is the main function of chloroplasts?
(1) Photosynthesis (2) Respiration
(3) Protein synthesis (4) Fatty acid synthesis
(5) Glycoprotein synthesis

2. How are sclerenchyma cells different from parenchyma cells?
(1) There are larger vacuoles.
(2) They are adapted to store food.
(3) There are very thin cell walls.
(4) They transport food.
(5) They become dead cells at their maturity.

3. Which of the following statements is correct regarding proteins?
(1) They are made up of 25 different amino acids.
(2) They exist only as primary structures.
(3) They can be identified using the biuret test.
(4) All proteins contain C, H, O, N, S, and P.
(5) The amino acid sequence of two different proteins is identical.

4. Consider the following plant hormones.
A - Auxin
B - Cytokinin
C - Abscisic acid
D - Gibberellin
Of the above, which pair of hormones are commonly used in plant tissue culture?
(1) A and B only (2) A and C only (3) B and C only
(4) B and D only (5) C and D only

5. Consider the following statements regarding tropical rainforests.
A - They are evergreen.
B - They comprise of a very high biodiversity.
C - Emergent, canopy, understory and forest floor are the four main layers of them.
Of the above, the correct statement/s is/are
(1) A only. (2) A and B only. (3) A and C only.
(4) B and C only. (5) all A, B, and C.

Updates.lk
Free Sri Lankan past papers & model papers

6. The heat of reaction of neutralization between NaOH and HCl is 55.9 kJ mol^{-1}. How much heat is released when 50 mL of 1.0 mol dm^{-3} NaOH solution is fully neutralized by using a solution of HCl?

(1) 1.1 kJ mol^{-1} (2) 2.7 kJ mol^{-1} (3) 5.5 kJ mol^{-1}
(4) 11.1 kJ mol^{-1} (5) 55.9 kJ mol^{-1}

7. A hydrogen bond is

(1) a bond between two hydrogen atoms.
(2) an attraction between two hydrogen atoms.
(3) a bond between a hydrogen atom and an highly electronegative atom.
(4) a bond or an attraction between a hydrogen atom and another atom.
(5) an attraction between a hydrogen atom and a highly electronegative atom.

8. Which of the following statements is correct regarding chemical reactions?

(1) All chemical reactions are multi-step reactions.
(2) All chemical reactions are exothermic.
(3) Every collision among reactants produces products.
(4) The rate of reaction is inversely proportional to the temperature.
(5) Collisions among reactants with proper orientation are required to produce products.

9. A glycosidic bond is a bond between

(1) two amino acid molecules.
(2) two hydrocarbon molecules.
(3) two lipid molecules.
(4) two carbohydrate molecules.
(5) a glycerol molecule and a long chain fatty acid molecule.

10. Consider the following products and the protein given in front of each product.

	Product	Protein
A	Cow milk	Albumin
B	Wheat flour	Casein
C	Gelatine	Collagen

In the above table, the product and the main protein present in the product are correctly shown in

(1) A only. (2) B only. (3) C only.
(4) A and B only. (5) B and C only.

11. Which of the following statements is correct regarding the municipal water treatment process?

(1) Reverse osmosis is used to remove dissolved gases with a bad smell.
(2) Ultraviolet rays are used to remove poisonous organic substances.
(3) The rotating drum method is used to destroy the pathogenic microorganism in water.
(4) Selected microorganisms are used to remove ions and poisonous organic substances.
(5) The trickling filter method is used to decompose organic substances using bacteria.

12. What is the correct statement regarding atmospheric pollutants?

(1) CO produces acid rains.
(2) NO contributes to global warming.
(3) SO_x destroys the ozone layer.
(4) SO_x contributes to the formation of photochemical smog.
(5) CFC contributes to global warming.

[See page three

Updates.lk Free Sri Lankan past papers & model papers

0019

13. Consider the following statements regarding soil and air pollution.

A - Air pollutants such as NO_x and SO_x contribute to soil salinity.
B - Continuous use of tank water for agriculture can increase soil salinity.
C - Due to the release of CFC the production of ground level ozone decreases.

Of the above, the correct statement(s) is/are

(1) A only. (2) B only. (3) C only.
(4) A and B only. (5) A, B and C all.

14. Which of the following is **not** a conversion associated with a natural process?

(1) Denitrification converts N_2 gas to NH_3 gas.
(2) Microbial nitrification converts NH_4^+ ions to NO_3^- ions.
(3) Dissolved CO_2 in sea water sedimentates as carbonates.
(4) Photosynthesis converts H_2O and CO_2 into glucose.
(5) Acid rains convert limestone to CO_2 gas and calcium ions.

15. What is the correct statement regarding chemical industrial process?

(1) The use of renewable raw materials can be a long-term advantage.
(2) There is no specific ratio for mixing raw materials.
(3) Raw materials of a high exothermic process can be mixed in large quantities.
(4) The 5S method allows to complete a process within 5 seconds.
(5) Industries should use raw materials that are uncommon and hard to obtain.

16. Soap is a

(1) mixture of various long chain hydrocarbons.
(2) product of saponification between esters and NaOH.
(3) mixture of solid long chain esters.
(4) mixture of long chain hydrocarbons, NaOH, and glycerin.
(5) main product of the bioethanol production process.

17. In the paper production process

(1) clay is used as a filler.
(2) starch is used as a softener.
(3) titanium dioxide is used as a binder.
(4) lignin produces the unique white colour.
(5) cellulose is a waste removed using NaOH.

18. A square shaped paper is made into a cylinder by rolling it along one of its sides so that the opposite side just touches but does not overlap. What is the ratio of the base radius to the height of the cylinder?

(1) $1:2\pi$ (2) $\sqrt{2}:\pi$ (3) $1:\sqrt{2}\pi$ (4) $1:\pi$ (5) $2\pi:1$

19. The diameter and the height of a heap of rice that is in the shape of a cone are 8 m and 3 m respectively. The heap of rice needs to be covered by a canvas to protect it from rain. What is the minimum area of the canvas required in m^2?

(1) 12π (2) 20π (3) 24π (4) 40π (5) 42π

20. The diameter of the Moon is approximately quarter of the diameter of the Earth. Accordingly, the surface area of the Earth is how many times as that of the moon?

(1) 2 (2) 4 (3) 8 (4) 16 (5) 32

21. A photo frame made of wire in the shape of a rectangle 8 cm × 15 cm has an extra wire along one diagonal. What is the total length of wire in the frame with the diagonal?

(1) 46 cm (2) 54 cm (3) 61 cm (4) 63 cm (5) 80 cm

[See page four

Updates.lk Free Sri Lankan past papers & model papers

● Questions **22** and **23** are based on the diagram below showing the plan of a balcony. The balcony has a shape of a sector of a circle with center A and radius 6 m.

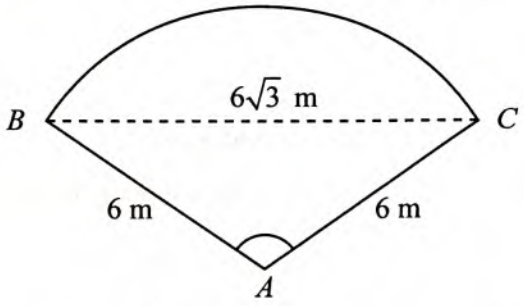

22. Given that the length of BC is $6\sqrt{3}$ m, what is the value of the angle $B\hat{A}C$?

(1) $\frac{\pi}{6}$ (2) $\frac{\pi}{3}$ (3) $\frac{\pi}{2}$ (4) $\frac{2\pi}{3}$ (5) $\frac{3\pi}{2}$

23. What is the area of the balcony in m^2?

(1) 4π (2) 6π (3) 8π (4) 12π (5) 24π

24. For the next game plan, a football coach marks how his team should be positioned on a coordinated grid. He places player A at (1, 3). Player A will be passing the ball to player B at (−6, 2). If player A kicks the ball directly along the ground to player B, what distance will the ball travel, in units of the coordinate system?

(1) $2\sqrt{2}$ (2) $\sqrt{26}$ (3) 7 (4) 8 (5) $5\sqrt{2}$

25. The coordinates of two stationary ships in the sea are shown in the diagram. A boat is travelling through the mid-point of the line joining the ships and perpendicular to that line. What is the equation of the path of the boat?

(1) $y=-\frac{4}{3}x+\frac{11}{3}$

(2) $y=\frac{3}{4}x+\frac{11}{3}$

(3) $y=-\frac{3}{4}x+\frac{5}{2}$

(4) $y=-\frac{4}{3}x+\frac{8}{3}$

(5) $y=\frac{4}{3}x+\frac{11}{3}$

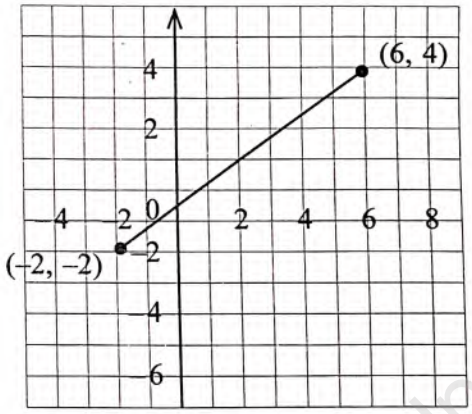

26. The monthly sales (in thousands of rupees) for a small business over the first eight months of the year are −45, 12, −7, −15, 15, 3, −22 and 35. The negative values indicate losses. What is the median of the above values?

(1) −15 (2) −2 (3) 0 (4) 2 (5) 15

27. The mean budget for 10 projects is 150,000 rupees. Due to changes in project scope, budgets of 180,000 and 140,000 rupees of two projects were adjusted to 200,000 and 120,000 rupees. What is the new mean after the revision of two budget in rupees?

(1) 120,000 (2) 130,000 (3) 140,000 (4) 150,000 (5) 160,000

28. Which of the following nonvolatile storage would be found in a tablet PC when considering the size of it?

(1) Blu-ray drive
(2) Hard Disk drive
(3) CD-ROM drive
(4) Secure Digital Memory card
(5) Random Access Memory card (Main memory)

[*See page five*

Updates.lk Free Sri Lankan past papers & model papers

29. What is the key function of an operating system in relation to the main memory?
(1) Managing network connections
(2) Controlling input and output devices
(3) Allocating and deallocating memory to processes
(4) Managing the physical storage of the hard disk
(5) Providing a graphical user interface for interactions

30. In the Linux operating system, **ps-A** command is used to
(1) create new processes.
(2) set the priority of processes.
(3) restart system services.
(4) modify the priority of processes.
(5) list all active running processes.

31. Consider the following statements about the characteristics stated by a student regarding a free and open-source software.
A - Users must pay money to the develop. r.
B - It can be downloaded free of charge.
C - It is illegal to share the installation file.
Of the above, what characteristic/s is/are correct regarding a free and open-source software?
(1) A only (2) B only (3) C only
(4) A and B only (5) A and C only

32. A student expects to edit the sentence given in the first box to the sentence in the second box.
First Box

many natural Saccharomyces species are used to produce CH3CH2OH.

Second Box

Many natural *Saccharomyces* species are used to produce CH_3CH_2OH.

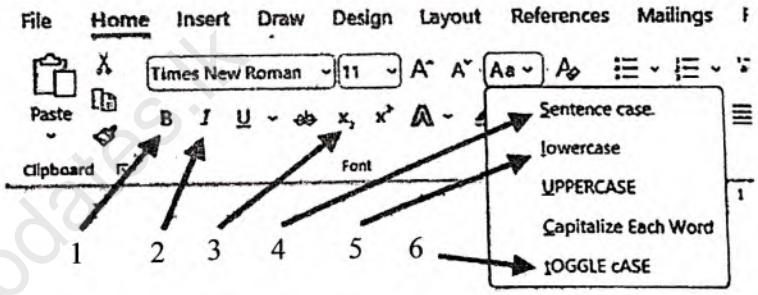

What are the tools required to edit the original sentence out of the tools 1 to 6 shown above?
(1) 1, 2 and 3 only (2) 1, 2 and 4 only (3) 2, 3 and 4 only
(4) 2, 4 and 5 only (5) 3, 4, 5 and 6 only

33. In a spreadsheet software NOW() function provides the
(1) current date only. (2) current time only.
(3) current month only. (4) current date and time only.
(5) current day of the week only.

34. Which of the following is a valid IPv4 address?
(1) 192.168.1.256 (2) 255.255.255.255 (3) 10.0.0.256
(4) 172.16.1.1 (5) 192.168.0.0.1

[See page six

Updates.lk Free Sri Lankan past papers & model papers

35. Consider the following statements regarding the Spam folder of an email account.

A - Emails in the Spam folder cannot be accessed.
B - It helps to keep the Inbox folder free from unsolicited emails.
C - Emails in the Spam folder cannot be transferred to the Inbox folder.

Of the above, the correct statement/s is/are

(1) A only. (2) B only. (3) C only.
(4) A and B only. (5) B and C only.

36. When sending an email, if the Bcc option is used,

(1) the email can be sent only to 10 recipients.
(2) the recipients cannot see the list of recipients.
(3) it cannot be forwarded to others.
(4) files attachment is not allowed.
(5) recipients cannot see the email address of the sender.

37. If the formula =A2*D7 in the cell C2 is copied to the cell C5 using the fill-handle tool (Auto fill) in a spreadsheet, what will be the formula in C5?

C2 | =A2*D7

	A	B	C	D
1	Paper ONE	Paper TWO	From paper ONE	From paper TWO
2	45	18	4.5	
3	35	40		
4	42	32		
5	26	40		
6				
7			Fraction from paper ONE	0.1
8			Fraction from paper TWO	0.2

(1) =A5*C7 (2) =A2*D7 (3) =A2*D8 (4) =A5*D7 (5) =A5*D8

38. What is the unit of force?

(1) $kg\ m^{-1}\ s^{-1}$ (2) $kg\ m\ s^{-1}$ (3) $kg\ m\ s^{-2}$ (4) $kg\ m^2\ s^{-1}$ (5) $kg\ m^2\ s^{-2}$

39. When the actual temperature is 0 °C, a thermometer displays –3 °C. A reading of that thermometer is shown in the diagram. What is the fractional error of the thermometer and the actual temperature?

(1) $\frac{1}{27}$ and 21°C
(2) $\frac{3}{24}$ and 21°C
(3) $\frac{1}{21}$ and 27°C
(4) $\frac{3}{24}$ and 27°C
(5) $\frac{1}{27}$ and 27°C

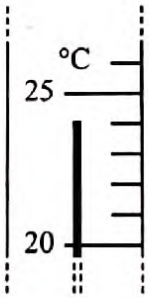

40. There is a steel block with the mass of 5 kg which contains an air filled void inside. When it is completely immersed in water, 550 mL of water is displaced. What is the volume of the void? (Density of steel and water are 8 $g\ mL^{-1}$ and 1 $g\ mL^{-1}$, respectively.)

(1) 32 mL (2) 40 mL (3) 50 mL (4) 75 mL (5) 150 mL

41. A trolley at rest on a smooth rail track inclined at 30° to the horizontal was released. What is the speed of the trolley after it has travelled 62.5 m down the track? ($g = 10\ m\ s^{-2}$)

(1) $\sqrt{62.5}\ m\ s^{-1}$ (2) $25\ m\ s^{-1}$ (3) $25\sqrt{2}\ m\ s^{-1}$ (4) $50\ m\ s^{-1}$ (5) $50\sqrt{2}\ m\ s^{-1}$

[See page seven

Updates.lk Free Sri Lankan past papers & model papers

42. The momentum of a motorcycle changes at a constant rate from 50 kg m s^{-1} to 550 kg m s^{-1} in 10 s. How much is the force applied on the motorcycle?

(1) 5.0 N (2) 5.5 N (3) 50 N (4) 55 N (5) 550 N

43. The masses of a cannon and a cannonball are 2000 kg and 25 kg, respectively. When fired, the cannon moves horizontally backward at a speed of 5 m s^{-1}. What is the horizontal velocity of the cannonball?

(1) $\frac{80}{\sqrt{2}}$ m s^{-1} (2) 80 m s^{-1} (3) $80\sqrt{2}$ m s^{-1} (4) 400 m s^{-1} (5) $400\sqrt{2}$ m s^{-1}

44. A vehicle manufacturer plans to make the front interior surface of vehicles so that it retains a mobile phone using the friction between the two surfaces. If the angle between the front interior surface with the horizontal is 30°, what is the minimum coefficient of static friction required to prevent the mobile phone on the surface from sliding?

(1) $\frac{1}{2}$ (2) $\frac{1}{\sqrt{3}}$

(3) $\frac{\sqrt{3}}{2}$ (4) $\frac{2}{\sqrt{3}}$

(5) $\sqrt{3}$

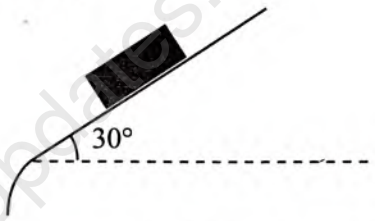

45. A radar antenna is rotating about its center with a moment of inertia of 14 kg m^2 and a rotation rate of 30 revolutions per minute. What is the kinetic energy of the antenna?

(1) $7\pi^2$ J (2) $14\pi^2$ J (3) $21\pi^2$ J (4) $28\pi^2$ J (5) $49\pi^2$ J

● Questions **46** and **47** are based on the *ABCD* circuit diagram below.

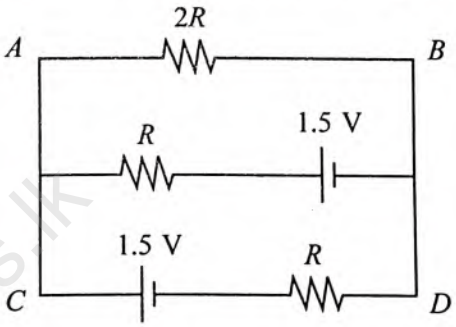

46. What is the voltage difference between *A* and *B*?

(1) 0.50 V (2) 0.75 V (3) 1.20 V (4) 1.40 V (5) 1.50 V

47. What is the power dissipation ratio between the resistor $2R$ and the resistor R between *C* and *D*?

(1) 1:1 (2) 2:1 (3) 4:1 (4) 6:1 (5) 8:1

48. A man is standing on a scale placed in an elevator. When the elevator is at rest, the scale reading is 50 kg. What is the scale reading when the elevator is moving upwards at acceleration of 2 m s^{-2}? (g = 10 m s^{-2})

(1) 40 kg

(2) 50 kg

(3) 52 kg

(4) 60 kg

(5) 62 kg

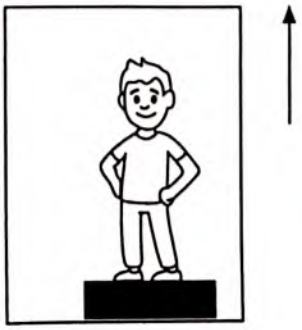

[See page eight

Updates.lk Free Sri Lankan past papers & model papers

49. Consider the statements given below, regarding fluid particles of a fluid flow that travels in a horizontal uniform tube that follows the Bernoulli's theorem.

A - Speed of the fluid particles travel along a stream line is constant.

B - The kinetic energy of fluid particles in a unit volume is $\frac{1}{2}\rho v^2$.

C - The speed of particles close to the central axis and to the wall of the tube are different.

Of the above, the correct statement/s is/are

(1) A only. (2) A and B only. (3) A and C only.
(4) B and C only. (5) A, B and C all.

50. Diameter of a wooden wheel of a cart is 1.40 m. A steel rim with a diameter of 1.39 m at the temperature of 30 °C needs to be inserted as the outlet cover to the wooden wheel. The steel rim can be expanded by heating it and the linear expansion coefficient of steel is $1.2 \times 10^{-5}\,°C^{-1}$. What is the minimum temperature that the steel rim should be heated so that it can be inserted to the wooden wheel?

(1) 120 °C (2) 600 °C (3) 630 °C (4) 1120 °C (5) 1200 °C

* * *

Updates.lk

PAST PAPERS WIKI

WWW.PastPapers.WiKi

Downloaded from Past Papers Wiki - Most Extensive Wikipedia of Past Papers!

Updates.lk Free Sri Lankan past papers & model papers

සියලු ම හිමිකම් ඇවිරිණි/முழுப் பதிப்புரிமையுடையது/All Rights Reserved]

ශ්‍රී ලංකා විභාග දෙපාර්තමේන්තුව ශ්‍රී ලංකා විභාග දෙපාර්තමේන්තුව ශ්‍රී ලංකා විභාග දෙපාර්තමේන්තුව ශ්‍රී ලංකා විභාග දෙපාර්තමේන්තුව
இலங்கைப் பரீட்சைத் திணைக்களம் இலங்கைப் பரீட்சைத் திணைக்களம் இலங்கைப் பரீட்சைத் திணைக்களம் இலங்கைப் பரீட்சைத் திணைக்களம்
Department of Examinations, Sri Lanka Department of Examinations, Sri Lanka Department of Examinations, Sri Lanka Department of Examinations, Sri Lanka
ශ්‍රී ලංකා විභාග දෙපාර්තමේන්තුව ශ්‍රී ලංකා විභාග දෙපාර්තමේන්තුව ශ්‍රී ලංකා විභාග දෙපාර්තමේන්තුව ශ්‍රී ලංකා විභාග දෙපාර්තමේන්තුව
இலங்கைப் பரீட்சைத் திணைக்களம் இலங்கைப் பரீட்சைத் திணைக்களம் இலங்கைப் பரீட்சைத் திணைக்களம் இலங்கைப் பரீட்சைத் திணைக்களம்

ශ්‍රී ලංකා විභාග දෙපාර්තමේන්තුව
இலங்கைப் பரீட்சைத் திணைக்களம்
Department of Examinations, Sri Lanka

අධ්‍යයන පොදු සහතික පත්‍ර (උසස් පෙළ) විභාගය, 2024
கல்விப் பொதுத் தராதரப் பத்திர (உயர் தர)ப் பரீட்சை, 2024
General Certificate of Education (Adv. Level) Examination, 2024

තාක්ෂණවේදය සඳහා විද්‍යාව II தொழினுட்பவியலுக்கான விஞ்ஞானம் II **Science for Technology II**	**Essay**	**67 E II**

Instructions:

- *Select minimum of* ***one*** *question each from* ***parts B, C*** *and* ***D*** *and answer* ***four*** *questions only.*
- *Each question carries* **150** *marks.*
- *Graph sheet required for question number* **5** *in part* ***B*** *will be provided.*
- ***Use of non-programmable calculators is allowed.***

Part B - Essay

5. The organizers of the 2024 Paris Olympics have collected data on the individual finishing times in the heats of the women's 100 m freestyle swimming event, rounded to the nearest first decimal place. They want to analyze the distribution of these times to understand the competitiveness of the event.

Table 1 shows the frequency distribution of the finishing times of 25 female swimmers.

Table 1 : Frequency distribution for the women's 100 m freestyle swimming times

Time Interval (seconds)	Number of Swimmers (frequency)
52.0 – 52.9	3
53.0 – 53.9	7
54.0 – 54.9	5
55.0 – 55.9	3
56.0 – 56.9	2
57.0 – 57.9	2
58.0 – 58.9	3
Total	**25**

(*a*) (i) Copy **Table 2** given below to your answer script and complete the columns of class boundary, class mark, less than cumulative frequency, and less than percentage cumulative frequency.

Table 2 : Cumulative frequency distribution of the swimming time

Class Intervals (seconds)	Number of Swimmers (frequency)	Class boundary	Class mark	Less than cumulative frequency	Less than percentage cumulative frequency
52.0 – 52.9	3				
53.0 – 53.9	7				
54.0 – 54.9	5				
55.0 – 55.9	3				
56.0 – 56.9	2				
57.0 – 57.9	2				
58.0 – 58.9	3				

(ii) Calculate the mean time of the swimmers selected for the study.

[*see page ten*

Updates.lk Free Sri Lankan past papers & model papers

(*b*) Draw the **less than cumulative frequency curve** for the distribution given in **Table 2** on the provided graph paper and attach it to the answer script.

(*c*) The 8 fastest female swimmers from the heats are qualified for the finals. Using the less than cumulative frequency curve drawn in part (*b*), determine the qualifying time for the final round.

(*d*) The organizers have decided to provide an incentive to the swimmers based on their performance in this event. The proposed reward scheme is presented in **Table 3**.

Table 3 : Proposed scheme of incentives

Time Intervals (seconds)	Incentive per head (Rs.)
52.0 – 54.9	150,000
55.0 – 56.9	120,000
57.0 – 58.9	100,000

Using the information in **Table 3**, calculate the total amount of incentives to be paid by the organizers to the female swimmers participated in this event.

(*e*) Write the pairs of coordinates to be used to draw the **less than percentage cumulative frequency curve** for the distribution given in **Table 2**.

(*f*) Assume that the national Olympic committees have identified 120 potential female swimmers around the world for this event at the 2028 Olympics in Los Angeles, having a similar distribution of finishing times in **Table 1**. The qualifying time for the heats in this event in 2028 is fixed at 56.95 seconds. Using the coordinates written in part (*e*), calculate the number of female swimmers expected to meet the qualifying time?

6. A student wants to make a model of a part of the Colombo city. He starts this with making a model of a building, which is currently the tallest residential building in Sri Lanka. He makes a simplified drawing of the building (Figure 1) and a cross-section of it (Figure 2), using a picture obtained from the internet. He plans to make 4 basic solids labelled A, B, C and D as in Figure 1. The bottom face of A and the upper face of B are coincident. Comparing measurements on the picture obtained from the internet, he marks distances that should be equal to each other, using letters x and y, as shown in the figures.

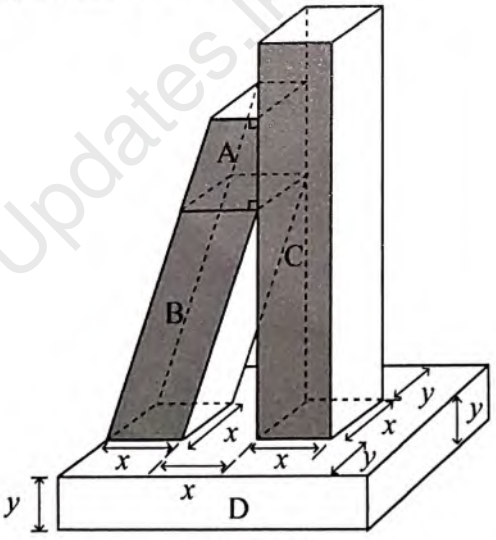

Figure 1

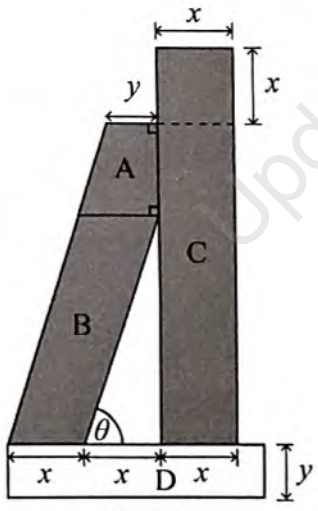

Figure 2

(*a*) Based on Figure 1,

(i) write the geometric names of the solids A, C and D.

(ii) suggest a suitable geometric name for the solid object B.

Based on Figure 2,

(iii) write the geometric names of the shaded cross-sections of A, B and C.

[*see page eleven*

Updates.lk Free Sri Lankan past papers & model papers

(*b*) The student creates a scale for the model. He chooses the height of D (y) to be 1 cm. The actual height corresponding to D is 18.5 m. According to his scale, calculate the **actual** total height of the building if the height of C is 12 cm.

(*c*) He finds that length y is half of length x. Calculate the following.

(i) The volume of C.

(ii) The base area of D, given that the volume of D is 28 cm^3.

(iii) The length and width of D.

(*d*) The vertical height of A is twice x and the vertical height of B is three times x.

(i) Calculate the volume of A.

(ii) Calculate the total area of the 4 **non-horizontal** surfaces of B.

(iii) Calculate the slant height of B, in surd form.

(iv) Show that the inclination of B with the horizontal $\theta = \tan^{-1} 3$.

(*e*) When the tallest tower in Sri Lanka, that is located nearby to this building is taken using the same scale, its height is 19 cm. The angle of elevation from the top of the building to the top of the tower is 30°. By considering the building and the tower as two vertical lines as shown in the below diagram, calculate the distance d that the building and the tower must be placed in the city-model, in surd form.

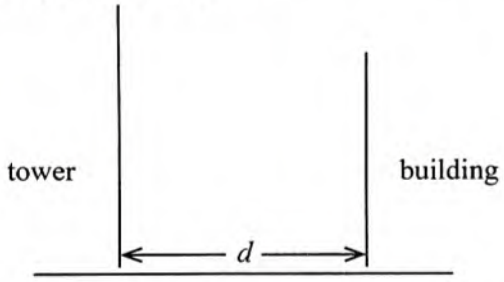

(*f*) Observing the curvy-shape of the tower and the square-shape of the building, the student wonders how the building would look more esthetically pleasing if A is replaced with a right-circular cylinder with the same height as A, in his model.

(i) What is the largest base radius such a cylinder can have, for it to lie within the top face of B?

(ii) By doing a calculation, determine whether this cylindrical part with the radius mentioned in above (i) will add an extra volume to the model of the building.

Part C - Essay

7. Soap products enriched with essential oils are used for a long period. Using the flow chart of a soap manufacturing process given below, answer the following questions.

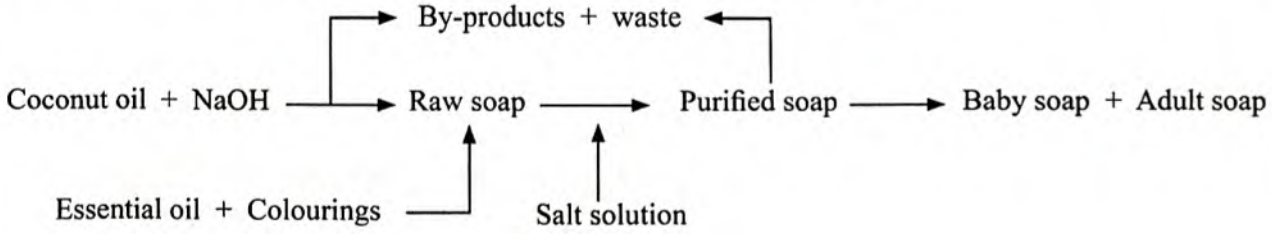

(*a*) (i) Name **two** raw materials used in the above process.

(ii) Name the main by-product of the above process.

[*see page twelve*

Updates.lk Free Sri Lankan past papers & model papers

(iii) Explain the difference between by-products and wastes of a production process.

(iv) The pH value of the raw soap is tested before proceeding to the final product. What is the reason for doing so?

(v) Write **two** main characteristics that can be added to soap by adding essential oil.

(vi) Write **two** factors to be considered in selecting raw materials for an industrial process.

(vii) The manufacturer submitted an application to obtain a patent for this soap product. The application was rejected due to the inability to fulfill the three criteria that must be fulfilled to issue a patent. What is/are the criterion/criteria the product failed to fulfill?

(viii) What is the main advantage of using detergents instead of soap?

(*b*) Due to a technical failure, the waste water of the above process was released to the environment.

(i) Name the **two** main inorganic ionic compounds that may be present in the released waste water.

(ii) Write **two** physical water quality parameters that can be used to test possible ground water pollution due to the inorganic ionic compounds in the released waste water.

(iii) The released waste water can increase the BOD value of ground water. What is BOD?

(iv) Explain how the BOD value of waste water is reduced by the municipal waste water treatment process.

(v) Explain **two** possible changes that can occur in the soil due to the two main inorganic ionic compounds contained in the released waste water.

(vi) Why do some detergents produce adverse effects on the environment?

(*c*) The method of production of essential oil used in the soap production is given below.

Plant materials containing essential oil → Extraction using reflux method → Purification using solvent extraction → Essential oil

(i) Write **one** advantage and **one** disadvantage of the reflux method.

(ii) Write **two** factors that must be considered in selecting the organic solvent for the solvent extraction.

8. (*a*) An inventor developed paints with a secondary metabolic compound (W) that can act as a binder. Compound W also possesses medicinal properties. A sample of raw extract and purified sample of W collected during the extraction process are tested using paper chromatography. Two resultant chromatography papers A and B are given below.

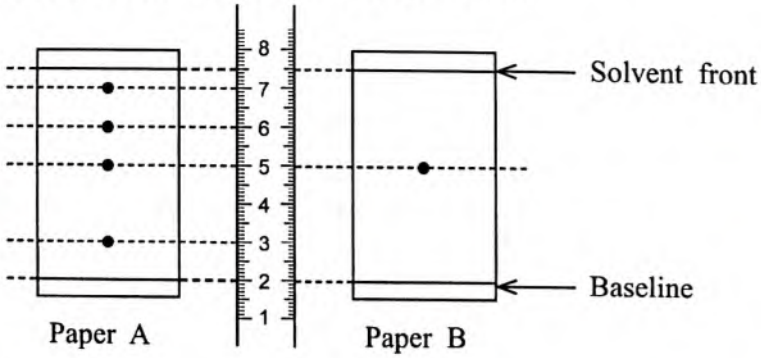

(i) What is a natural product?

(ii) What is the key function of a binder?

[*see page thirteen*

Updates.lk Free Sri Lankan past papers & model papers

(iii) Of the paper A and B, which one refers to the raw extract sample of W?

(iv) Calculate the R_f value of the compound W.

(v) Write a **disadvantage** of using the raw extract of W as a medicine.

(vi) Explain the 'medicinal efficiency' and the 'medicinal potency' of a medicine?

(vii) Explain why synthesizing compound W is essential instead of extracting it from plants for mass-scale production of the paint?

(*b*) Release of hydrocarbons, CO_2, NO_x and SO_x to the atmosphere produces adverse effects on the environment.

(i) Which of the above compounds contributes to acid rains?

(ii) What are the **two** strongest acids produced by the above compounds by dissolving in rainwater?

(iii) Which of the above compounds contributes to the production of photochemical smog?

(iv) Write **two** main adverse effects of photochemical smog.

(v) Explain how CO_2 has contributed to increase the average global temperature during the last few decades.

(vi) Write the key contribution made by the Kyoto Protocol and the Paris Agreement separately, in minimizing global warming.

(*c*) Recently, it was reported that there were sudden heavy rainfalls the Middle East countries and the Sahara Desert. This is mainly occurred due to the climate change caused by human activities. El Niño and La Niña are two phenomena that produce long-term climate changes.

(i) What are the **two** main climate changes occurred due to the El Niño and La Niña phenomena?

(ii) Mention 3R concept that used to minimize the human impact on nature?

(iii) Write the **three** main objectives of the cleaner production process used to reduce the human impact on nature?

Part D - Essay

9. (*a*) A pulley 'A' of radius 5 cm is coupled with a pulley 'B' of radius 20 cm using a light belt as shown in the diagram. Further, the pulley A is connected to an electric motor.



The angular speed of pulley A is increased from rest with a constant angular acceleration of 1.5 rad s^{-2} for 60 seconds. Calculate

(i) angular velocity of pulley A

(ii) linear speed of the belt

(iii) angular velocity of pulley B

in 60 seconds. (Assume that the belt does not slip on the pullies.)

[*see page fourteen*

Updates.lk Free Sri Lankan past papers & model papers

(*b*) The above pulley system given in (a) is used in the following setup to mix fruit juice in a factory. The fruit juice is mixed by a pair of rotating blades connected to pulley B by a vertical uniform thin axle. A little while after starting to mix the fruit juice, the blades rotate at a constant angular speed of 20 rad s^{-1}.

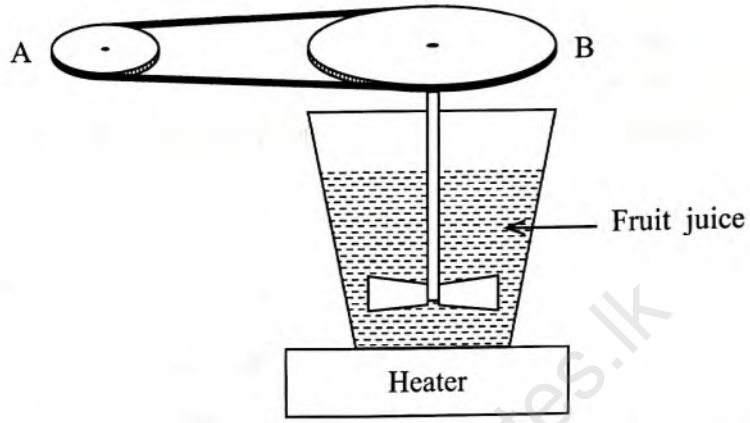

(i) If the torque about the rotating axle on the pulley B is 10 N m, what is the torque about the rotating axle applied on the blades by the juice?

(ii) When the motor is disconnected from the electricity supply, the blades come to rest after 15 revolutions. Calculate the angular deceleration of the pair of blades. (Assume that the pair of blades experiences a uniform angular deceleration.)

(iii) The moment of inertia of the system containing the pulley B, the axle, and the blades, about the rotating axis is 0.15 kg m^2. Calculate the torque exerted on this system while decelerating.

(*c*) (i) Using the heater in the above setup, the temperature of 10 L of fruit juice in the container is raised from 25°C to 50°C. Calculate the amount of heat absorbed by the fruit juice. (The density of the fruit juice is 1.1 kg L^{-1} and the specific heat capacity of the fruit juice is 4000 J kg^{-1} $°C^{-1}$.)

(ii) The heating coil of the heater is made of nichrome wire and has a length of 3.0 m. The resistance and the resistivity of the nichrome wire are 0.08 Ω cm^{-1} and 1.5×10^{-6} Ω m respectively. Calculate the diameter of the nichrome wire.

(iii) If the heater is designed to operate with an electricity supply of 230 V, calculate the power of the heater.

10. (*a*) Electricity consumption of a house of a certain month is 165 kW h. There is a 3.0 kW electric water heating tank (geyser) with the capacity of 30 L in the house. By connecting it to the main electrical supply for 30 minutes, a volume of 30 L of water is heated and consumed per day.

(i) If charge per unit is Rs. 48 and the monthly fixed charge is Rs. 1770, calculate the cost for the electricity for this month.

(ii) Calculate the number of units consumed by the geyser in a month with 30 days.

(iii) When the geyser is fully filled with water at 25°C and heated for 30 minutes, calculate the maximum temperature that the water will reach. (The density and the specific heat capacity of water are 1.0 kg L^{-1} and 4200 J kg^{-1} $°C^{-1}$ respectively. Neglect the heat loss to the environment and the heat absorbed by the geyser.)

[see page fifteen

Updates.lk Free Sri Lankan past papers & model papers

(*b*) To reduce the electricity bill of the house, a solar water heater is installed on the roof top. The water storage tank and a special tube connected to it and its cross-section are shown below.

This special tube consists of a clear outer glass tube and a black-coated inner glass tube. A copper (Cu) tube runs through the center of the black-coated tube, and it extends into the water tank. The space between the outer and inner glass tubes is vacuum-sealed. The black-coated surface absorbs sunlight and converts that energy into heat, which is then, transferred to the water via Cu tube in the center.

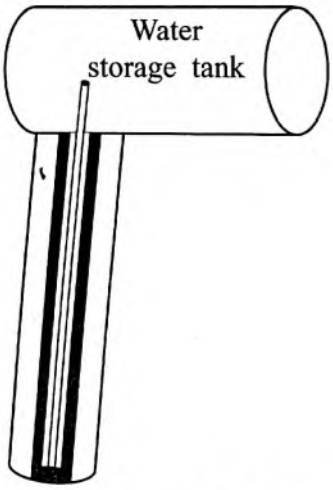

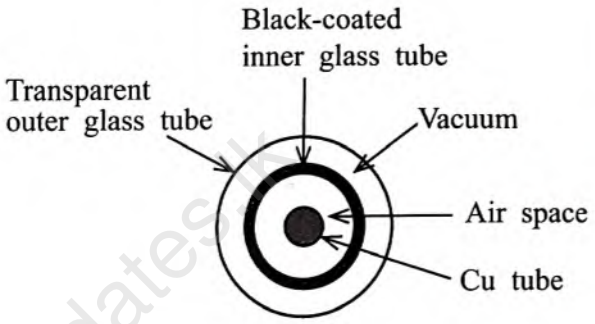

Cross-section of the special tube

(i) What are the methods of heat transfer from black-coated inner tube to the Cu tube?

(ii) What is the main method of heat transfer which results heat loss through the vacuum from the surface of black-coated tube to the outer space?

(*c*) Outer surface of the water storage tank is made of shiny stainless steel. Due to this, the outer surface of the tank is kept at a higher temperature.

(i) Which method of heat loss is minimized by having a shiny surface for the water storage tank?

(ii) Explain how to minimize the heat loss of the warm water in the water tank by keeping the outer surface of the tank at a higher temperature.

(*d*) The power of solar energy incident on a unit surface area is 1000 W m^{-2}. Solar energy incident on the special tube is transferred to water in the form of heat at an efficiency of 50%.

(i) The effective area of the tube in which solar radiation is absorbed is 0.18 m^2. Calculate the power of heat transfer to water by the tube.

(ii) Consider that the solar energy is received for 4 hours per day. Calculate the heat energy provided to water in kw h by the tube per day.

(iii) The amount of heat produced for 30 minutes by the electric heater mentioned in (*a*) above should be produced by these special tubes per day. Calculate the **minimum number** of special tubes required for that.

* * *

Updates.lk Free Sri Lankan past papers & model papers